Anello rotante

Rotary index ring

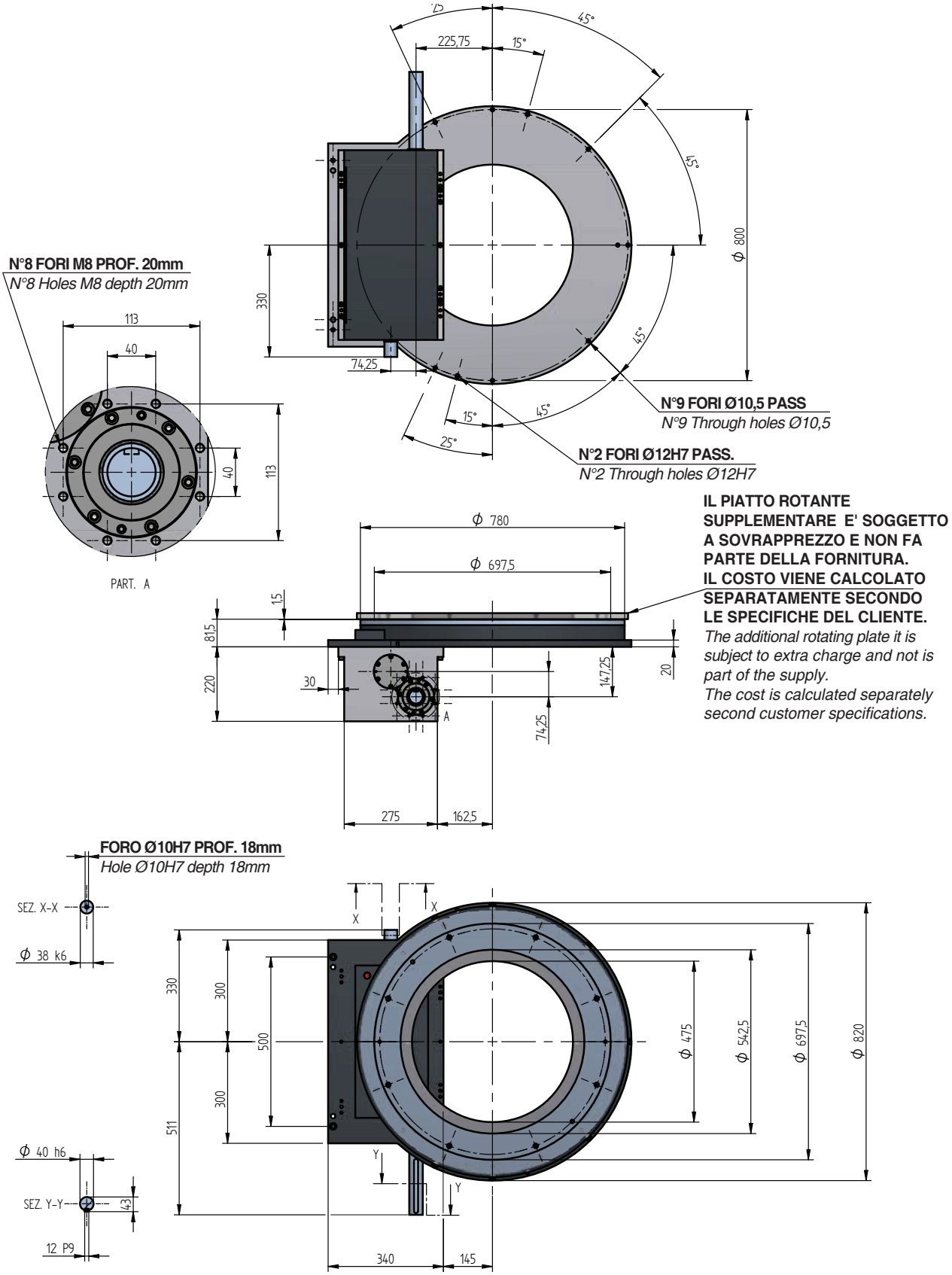

KG 350 kg