Rotary Index table

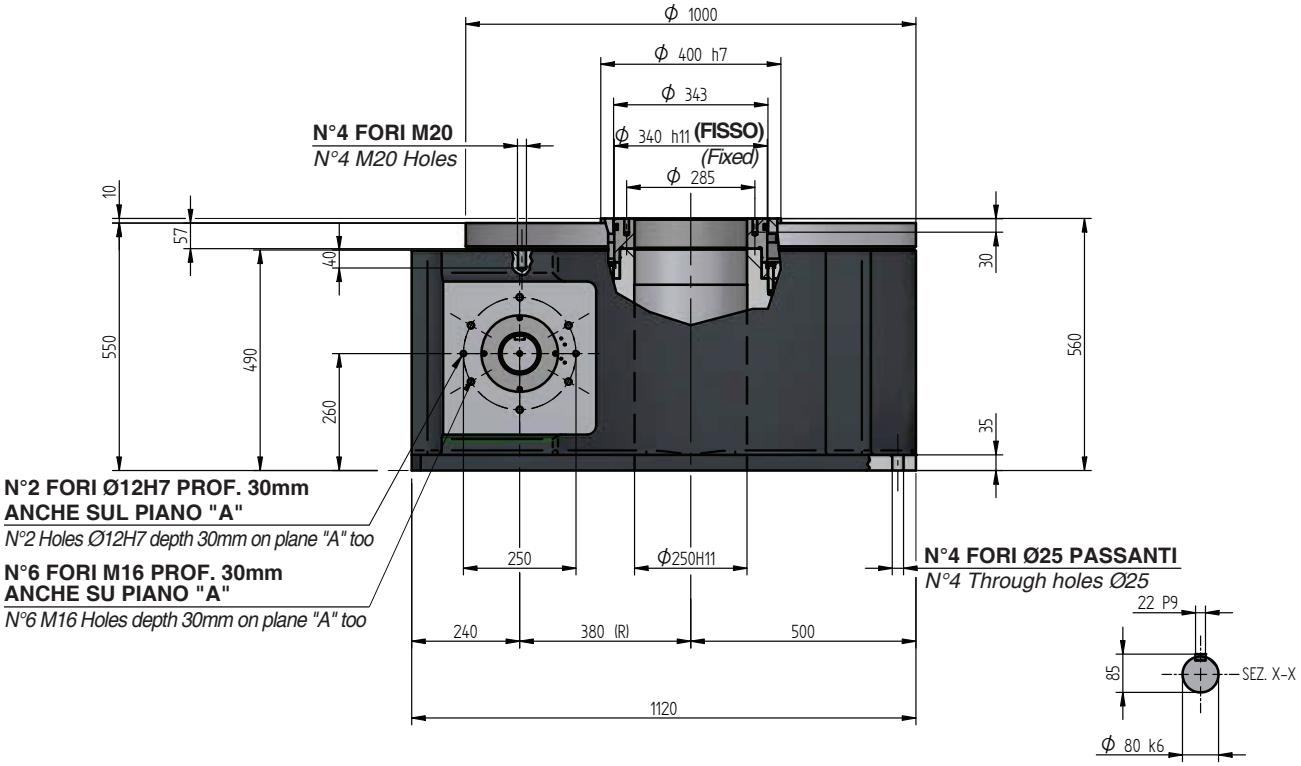

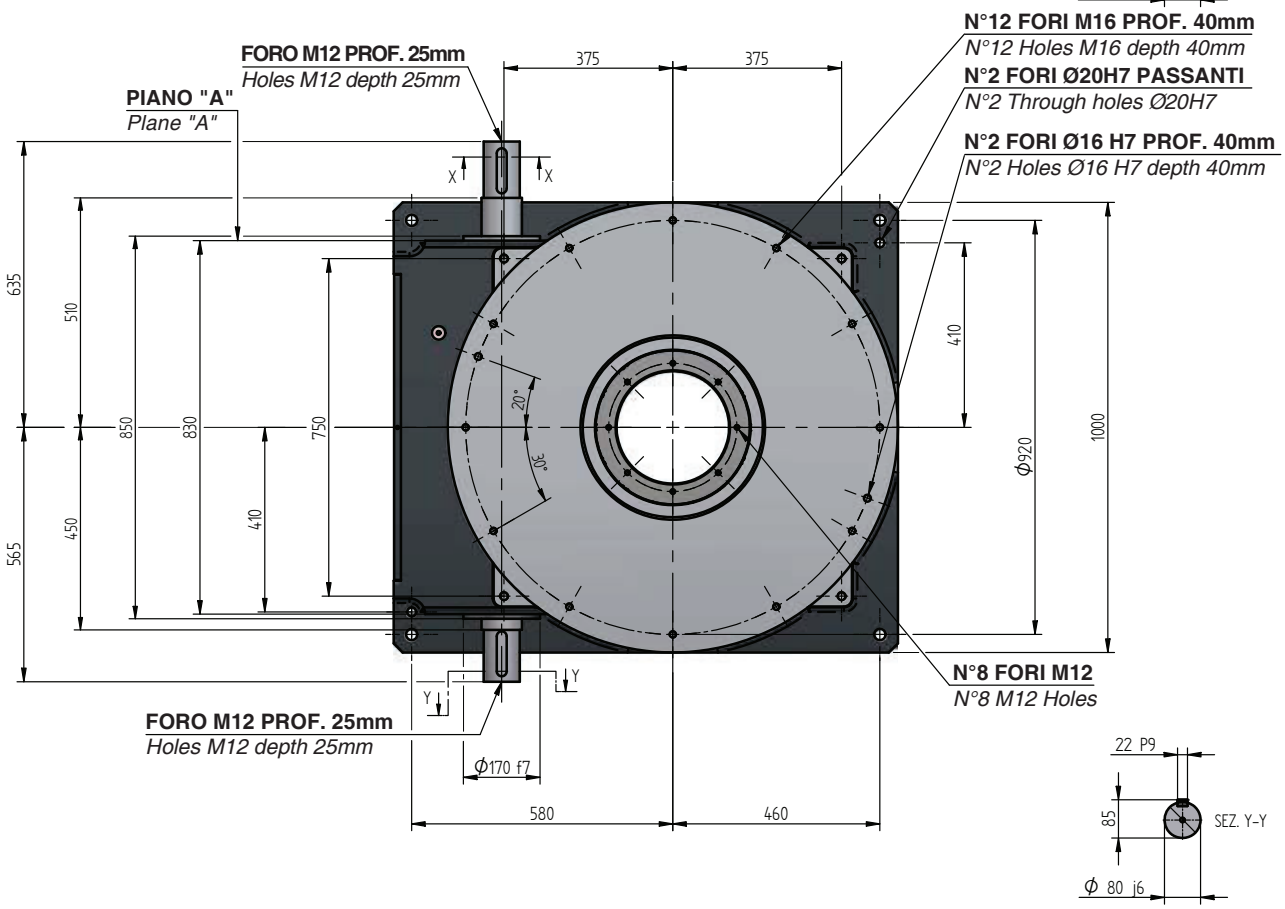

KG **2000 kg**