Rotary Index table

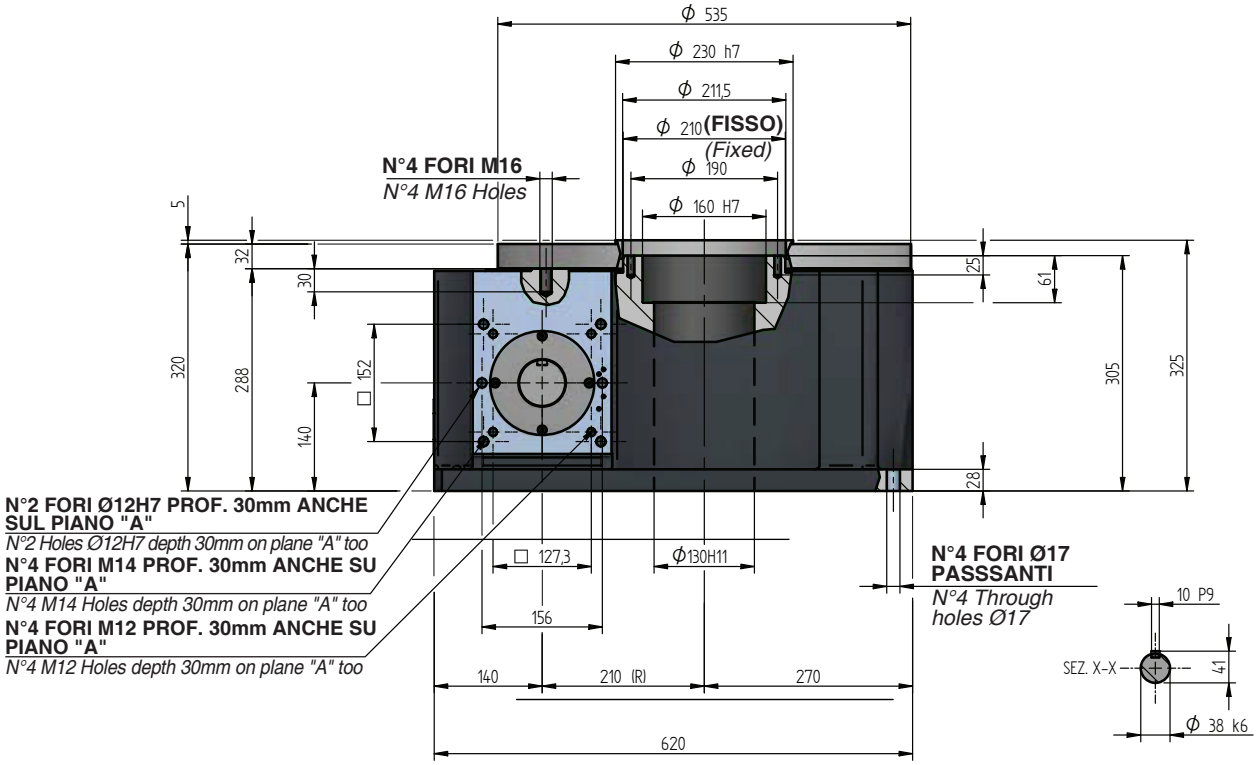

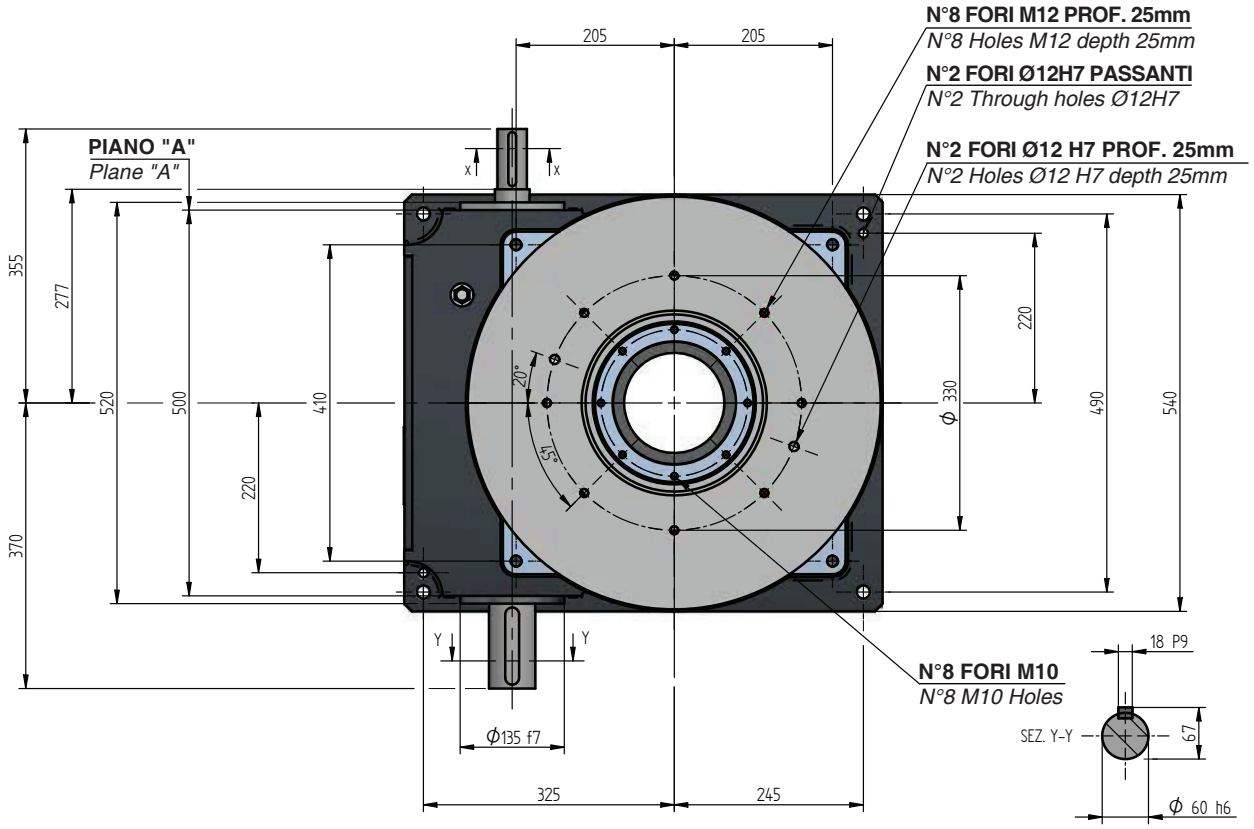

KG 432 kg